R15ID7T-RKC3 (Intel® Atom Dual Core D2550+NM10 Platform)

Mechanical Design

Rack Mount

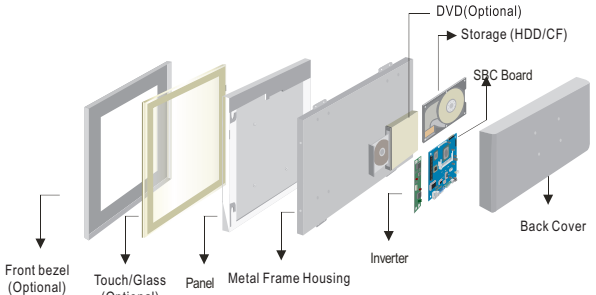

Modularized Construction

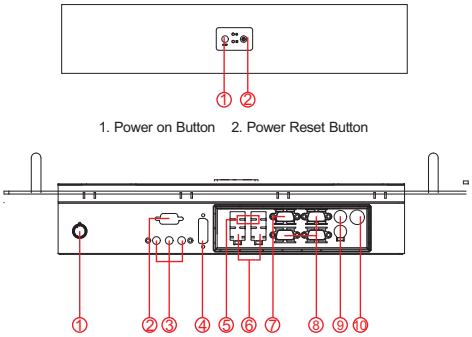

1. Brightness Adjustment Knob
2. RS-232 Conn. (Optional)
3. Audio Jack
4. DVI (Optional)
5. USB
6. RJ-45
7. VGA Out
8. RS-232 Conn.
9. PS/2
10. DC-IN Lockable Power Jack

Fully Integrated I/O

Dimensions

FRONT VIEW

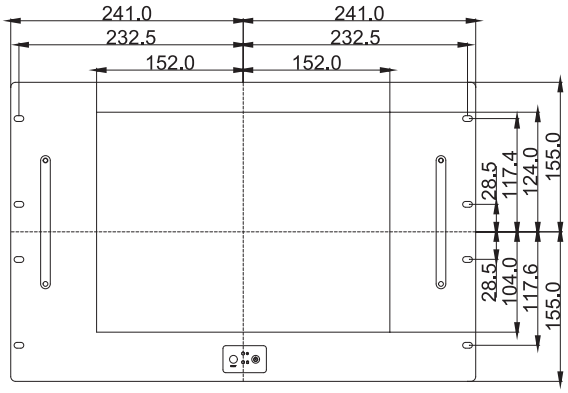

SIDE VIEW

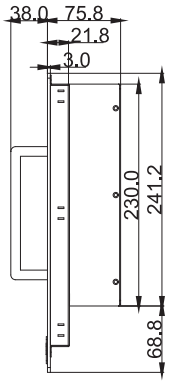

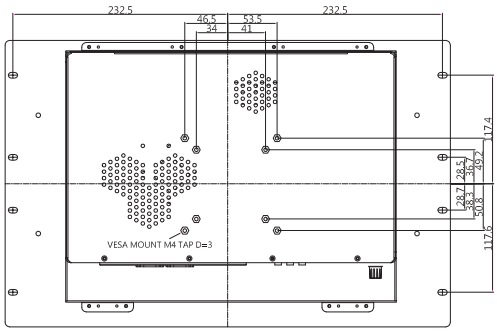

BACK VIEW

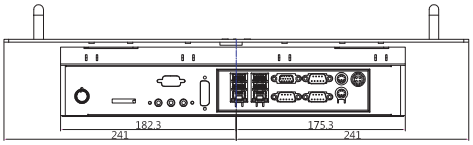

BOTTOM VIEW

* Measurements shown in mm
* Tolerance of all dimensions is shown as follow 0~30 mm ± 0.1 mm, 30~50 mm ± 0.15 mm, 50~120 mm ± 0.2 mm, above 120 mm ± 0.25 mm
* Note: this is a simplified drawing and some components are not marked in detail. Please contact our sales representative if you need further product information.

Specifications

System :

- CPU : Intel® Atom Dual Core D2550 1.86GHz Processor
- Memory Slot : DDR3 1066 MHz SO-DIMM Slot, Max. 4GB
- System Chipset : NM10
- IDE/SATA : 2 x SATA
- LAN : Dual Broadcom BCM57780 GbE controller
- Audio Codec : Realtek ALC886 HD Audio Codec

Input / Output :

- Serial Ports : 2 x RS232, 1 x RS232/422/485 ●
- USB Ports : 4 x USB Type-A Receptacle
- Keyboard / Mouse : 2 x PS/2
- Ethernet : 2 x RJ 45-10/100/1000 Mbps
- VGA : 1 x VGA (female)
- Audio : Line-Out, Line-In, Mic in

● Default setting:RS232

Expansion Slot :

- 2 x Mini PCIe (1 for WiFi, 1 for 3G Module), 1 x PCI

* A customized housing is needed if you would like to have the PCI expansion.

Power Specifications :

- Power Input : 12V DC IN (Lockable Power Jack)
- Power Consumption : 38W (typ.)

Accessories :

- External Adapter : 110~230V Ac-in power adapter

Panel Spec :

- Size/Type : 15" TFT
- Resolutions : 1024 x 768
- Brightness : 250 cd/m^2 (typ.)
- Contrast Ratio : 700 : 1(typ.)
- Viewing Angle : -70~70(H);-65~60(V)
- Max. Colors : 16.2M

Environment Considerations :

- Operating Temperature : 0 deg.C to 45 deg.C
- Operating Humidity : 30% to 90% (non condensing)

OS BSP / Driver Support :

- Support Windows 7 embedded / Windows XP embedded

Order Options :

Mechanical :	Open Frame Panel Mount(10 mm bezel) IP65(10 mm bezel)	Storage	: 2.5" HDD/ 2.5"SSD
Touch	: 5 Wires Resistive(Optional)	RAM	: DDR3 1066 Max 4GB
	(A customized housing is needed if you have demands of SAW/IR/SC touch)	OS	: Windows 7 embedded / Windows XP embedded (Optional)

SCIENCE GATE Your Automation Partner
SCIGATE AUTOMATION (S) PTE LTD
No.1 Bukit Batok Street 22 #01-01 Singapore 659592
Tel: (65) 6561 0488 Fax: (65) 6562 0588
Email: sales@scigate.com.sg Web: www.scigate.com.sg
Business Hours: Monday - Friday 8.30am - 6.15pm

CE FC RoHS COMPLIANT 2011/65/EU

Note: All Specifications are subject to change without prior notice!

Revised Date:06/10/2014