# Military Grade 19" Rack Mount Panel PC (Intel® Celeron Platform)

## MODEL #: R19IB3S-RKA3ML

## Mechanical Design

- 19" SXGA TFT-LCD
- Intel® Celeron N2930 2.16GHz Processor
- Anti-Corrosion Housing / Fanless
- Compliant with MIL-STD-810G/F
- Flush Rack / Rack Mount Mechanical Design (9U)
- Convenient On-Screen Display Controls
- AC 110~240V Power input default / Isolation DC 9~36V Power input (Optional)
- Built-in Light Sensor for auto brightness control
- Military Grade Power Connector (MIL-DTL-38999/1)

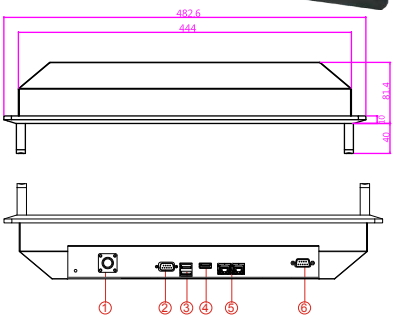


FRONT VIEW

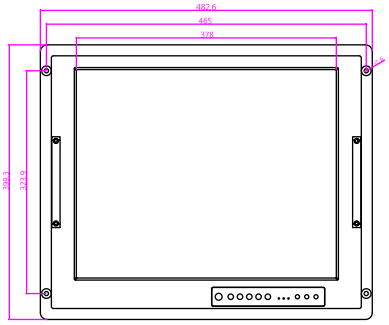


SIDE VIEW

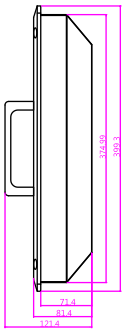


BACK VIEW

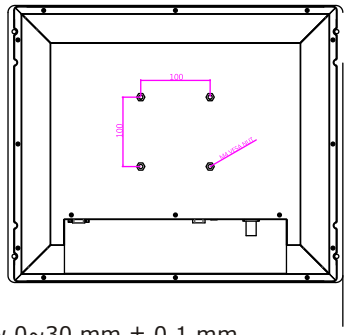


1. Power in (MIL-DTL-38999/1)
2. RS232/422/485 (Default RS232)
3. 1 x USB 2.0 / 1 x USB 3.0
4. HDMI
5. LANx2
6. RS-232(Optional)

* Measurements shown in mm.
* Tolerance of all dimensions is shown as follow 0~30 mm ± 0.1 mm, 30~50 mm ± 0.15 mm, 50~120 mm ± 0.2 mm, above 120 mm ± 0.25 mm.
* Note: this is a simplified drawing and some components are not marked in detail. Please contact our sales representative if you need further product information.

## Display Specification

### Characteristics :

- Resolutions : 1280 x 1024
- Brightness : 350 cd/m² (typ.)
- Contrast Ratio : 1000 : 1(typ.)
- Viewing Angles : -85~85(H);-80~80(V)
- Max Colors : 16.7M(Colors)

### System Specifications :

- Processor : Intel® Celeron N2930 2.16GHz
- BIOS : AMI 16Mbit Flash
- System Chipset : Intel® SoC Integrated
- System Memory : 1 x SO-DIMM DDR3L 1066/1333 default 4GB
- Lan Controller : Intel® I210-AT GbE LANx2
- Storage : mSATA SSD, Default 64GB
- Audio Codec : Realtek ALC886 HD Audio Codec

* A customized housing is needed if you would like to have the PCI expansion.

### Power Specifications :

- Power Input : Default AC 110~240V in
  Optional isolation 9~36V DC in

### Environment Considerations :

- Operating Temperature : -20 deg.C to 60deg.C
- Operating Humidity : 95%RH ±3%

### I/O Connectors :

- Plug & Play : VESA DDC 1/2B
- Back Panel I/O Port : 1 x Power Input (Military)
  1 x USB2.0, 1 x USB3.0
  1 x RS232(Default)/422/485
  2 x RJ-45
  1 x VGA
  1 x RS232 (Optional)


SCIENCE GATE Your Automation Partner
SCIGATE AUTOMATION (S) PTE LTD
No.1 Bukit Batok Street 22 #01-01 Singapore 659592
Tel: (65) 6561 0488 Fax: (65) 6562 0588
Email: sales@scigate.com.sg Web: www.scigate.com.sg
Business Hours: Monday - Friday 8.30am - 6.15pm


### Order Information (Optional) :

- Touch : 5 Wires Resistive / 5 Wire Resistive with EMI Coating
- Glass : EMI Coating Glass (Default AR Glass)
- OS : Windows Embedded Standard 7
  Windows Embedded 8 Standard
  Windows Embedded 8.1 Industry
  Windows 10 IoT Enterprise
- Storage : mSATA SSD up to 256GB
- RAM : SO-DIMM DDR3 1666, max up to 8GB
- Power : Optional isolation 9~36V DC in

### Accessories :

- Military Grade MIL-DTL-38999/1 Power Cord
- Driver & Manual CD

### Environmental(MIL-STD 810F/G Compliance)

- Vibration : MIL-STD-810F/G Method 514.5
- Humidity : MIL-STD-810F/G Method 507.4
- Transit Drop : MIL-STD-810F/G Method 516.5
- High Temperature : Storage:MIL-STD-810F/G Method501.4
  Operation:MIL-STD-810F/G Method501.4
- Low Temperature : Storage:MIL-STD-810F/G Method502.4
  Operation:MIL-STD-810F/G Method502.4

### Environmental(MIL-STD 461E/F Compliance)

- RE : RE 101 / RE 102
- CE : CE 101 / CE 102

Optional with EMI Glass / Touch

- CS : RS101 / RS103
- CS : CS 101 / CS 106 / CS 109 / CS 114
  CS 115 / CS 116

* If you require external test report, Winmate will charge NRE fee.

CE FC RoHS COMPLIANT 2011/65/EU

Note: All Specifications are subject to change without prior notice!

Release Date: 15-Jan-2018 V1.4