M133W VESA Mounting Kit

Model Name: VS-M133-2

Features:

- 75x75mm VESA Mount Points
- Slim Design; Metal in Black Paint
- VESA Mounting Kit has cutout to allow for removal/insertion of the M133W Main Battery

Package Content:

- M133W VESA Mounting Kit x 1
- M3*6mm Round Screws x 5

Dimensions:

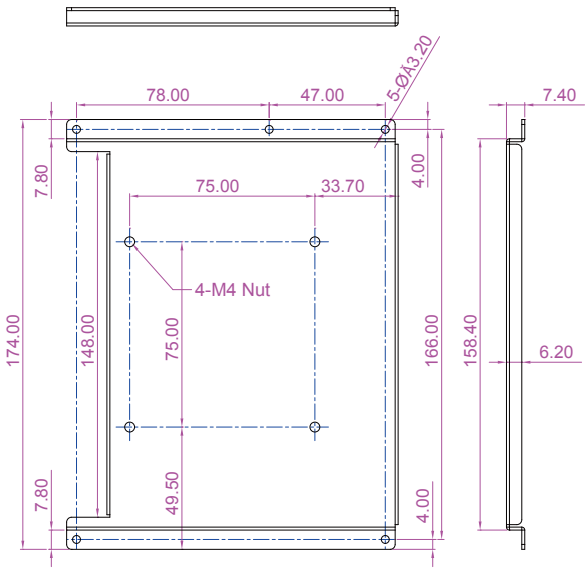

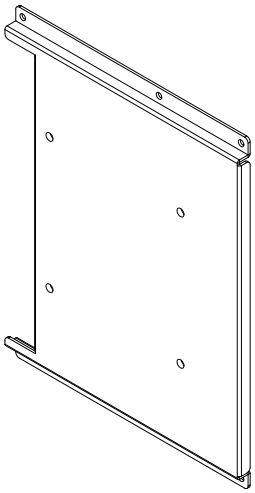

Installation:

VESA Mount Metal

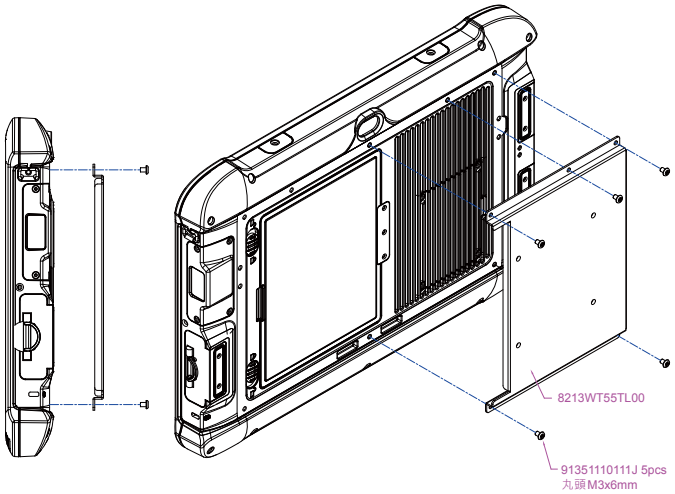

M3*6mm Round Screws x 5 pcs

VESA Mount

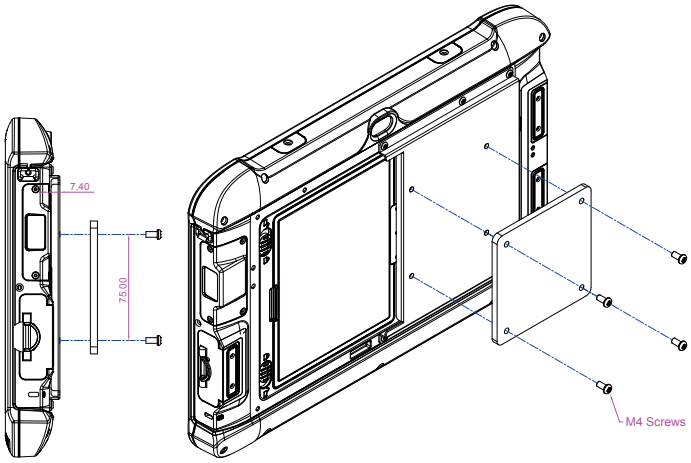

M4 Screws x 4 pcs

SCIENCE GATE
Your Automation Partner
SCIGATE AUTOMATION (S) PTE LTD
No.1 Bukit Batok Street 22 #01-01 Singapore 659592
Tel: (65) 6561 0488 Fax: (65) 6562 0588
Email: sales@scigate.com.sg Web: www.scigate.com.sg
Business Hours: Monday - Friday 8.30am - 6.15pm