ACCESSORIES

MALE TO FEMALE THREADED ROD ADAPTER

Drawing Number: F1795-02	
INCH [mm]	Material: ALUMINUM

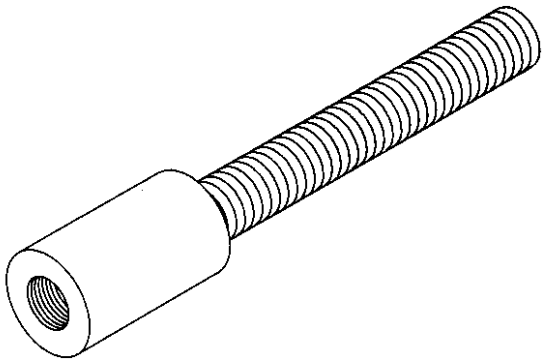

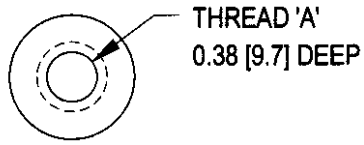

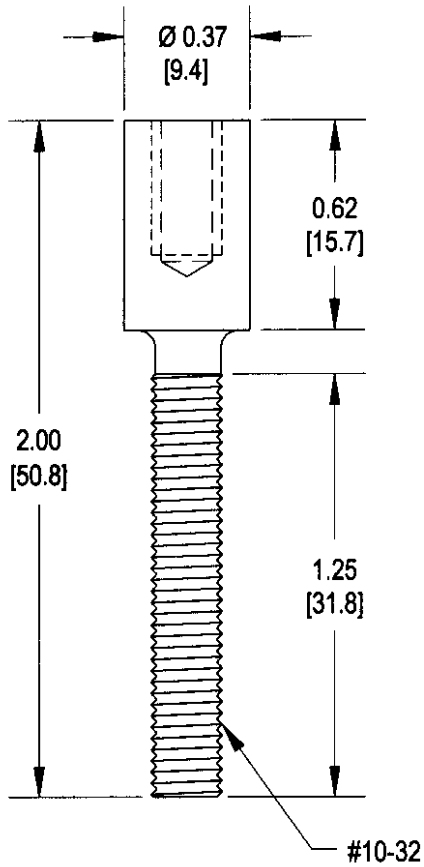

DWG. #	A
F1145-1	#10-32
F1145-2	1/4-20
F1145-3	1/4-28
F1145-4	#8-32
F1145-5	#6-32
F1145-6	#4-40

SCIENCE GATE
Your Automation Partner
SCIGATE AUTOMATION (S) PTE LTD
No.1 Bukit Batok Street 22 #01-01 Singapore 659592
Tel: (65) 6561 0488 Fax: (65) 6562 0588
Email: sales@scigate.com.sg Web: www.scigate.com.sg
Business Hours: Monday - Friday 8.30am - 6.15pm

This drawing is submitted solely for the information and exclusive use of the original addressee. It is not to be divulged in whole or in part, by any firm or individual without written permission from FUTEK

10 THOMAS
IRVINE, CA 92618 USA
1-800-23-FUTEK (38835)

INTERNET:
http://www.futek.com