Pro-face

by Schneider Electric

Smart Portal

SP5000 SERIES

SCIENCE GATE
Your Automation Partner

SCIGATE AUTOMATION (S) PTE LTD
No.1 Bukit Batok Street 22 #01-01 Singapore 659592
Tel: (65) 6561 0488 Fax: (65) 6562 0588
Email: sales@scigate.com.sg Web: www.scigate.com.sg
Business Hours: Monday - Friday 8.30am - 6.15pm

Jan 2016

www.proface.com

Connecting information and people
for optimal communication

SMART PORTAL

With increasingly sophisticated machine performance; production management and predictive maintenance utilizing operation data; and the growing popularity of the cloud, big data is coming to the manufacturing shop floor.

Pro-face has realized unprecedented connectivity in the new SMART PORTAL, creating a new interface designed firmly with the future in mind.
The SP5000 series allows a huge variety of data to be downloaded to SMART PORTAL and transmitted in an optimal format to those who need it.

SMART PORTAL connects information and people for optimal communication

Valuable information in the right format

Having more information is not necessarily better than having less. Value is created when the right information reaches the right people in the right format.

Bring your factory closer to your office

By segmenting the network, SMART PORTAL makes it possible to connect factories and offices while ensuring the highest security.

Simple to use —any time, any place

Overseas production and the diversification of market needs have increased the need for efficient machine setup and maintenance.

Check out the Movies

These movies will give you more information about SMART PORTAL concepts and benefits.

SMART PORTAL links two previously

Enterprise Network

Integrate different networks while ensuring sufficient security.

HMI RELIABILITY

Communicate real-time with a range of control devices, and collect data at high speed.

Shop Floor Network

Connect various devices on your shop floor with programless.

separate worlds

IPC VERSATILITY

Utilize Windows applications to deal with alarms or maintenance.

Accurately convey vital information in the right way at the right time.

Case 1 High performance HMI

Provide real-time response

Improves rendering performance and achieves real-time response. With high-speed processing ensuring high-speed rendering, SMART PORTAL replaces devices that have suffered from unsatisfactory response speed in the past.

Case 2 Application PC

Use as a built-in application PC

SMART PORTAL can be used in environments where PCs have been built into machines to allow the use of Windows applications. Dedicated apps can be used on the SMART PORTAL.

Case 3 Maintenance PC

Use as a maintenance PC

Manuals and all kinds of development tools can be saved in SMART PORTAL. There is no need to take a PC down to the factory every time maintenance work needs to be done.

Case 4 Data Collection PC

Use as a data collection PC

Separate IP addresses can be allocated for SMART PORTAL's two Ethernet ports. A network with the highest security can be built between the office and the factory. In addition, collected data can be stored on NVRAM to protect from data loss.

Display × Box module design provides

- With a selection of six displays and two boxes available, there are twelve SMART PORTAL combinations
- Modular design allows the display to be attached to and detached from the box, making it possible

Premium Display 15″ 12″ 10″

High performance display supports multi-touch operation and provides brightness sensor and auto-scaling.

Model No.	15"	SP-5700TP
	12"	SP-5660TP(Wireless LAN model)
	12"	SP-5600TP
	10"	SP-5500TP

Auto Scaling

A single screen data works on three sizes of premium displays for smooth management of mixed product lines.

Wireless LAN

Easily establish a wireless network in tough environments with a built-in antenna and IP67F-compliant protection structure.

13 COMBINATIONS

Integrated Mounting Bracket

Integrated mounting bracket does away with the need for separate optional accessories every time setup or maintenance work is conducted.

Advanced Display 12″Wide 10″Wide 7″Wide

The wide-screen display can display a large amount of information.

Model No.	12" Wide	SP-5600WA
	10" Wide	SP-5500WA
	7" Wide	SP-5400WA

flexible functionality and size

to choose from.
to replace only parts that need replacing

Open Box

Able to run a variety of Windows applications on WES7.
(equipped with HMI Runtime standard)

Model No. SP-5B40

Back Side Interfaces

Serial	Ethernet	USB (Type A)	USB (mini-B)	USB (Type A)	DVI-D	AUX	AUDIO Input
×2	×2	×2	×1	×1	×1	×1	×1

CFast/ SD Card Slot

Set up screens by simply inserting a CFast (Open Box) or SD card (Power Box). No need for a separate PC.

Power Box

Solid box achieves high-speed processing and fast display.

Model No. SP-5B10

Back Side Interface

Serial	Ethernet	USB (Type A)	USB (mini-B)	AUX
×2	×2	×2	×1	×1

Further extend functionality

HMI Screen Editor and Logic Programming Software

GP-Pro EX

Intuitive operation reduces development time required for screen creation.

Remote Monitoring Software for Mobile

Pro-face Remote HMI

Display and operate the factory via a tablet or smartphone.

USB Solutions

EZ Series

Extend functionality simply via a single USB cable.

Display Module

SP5000SERIES

SP-5700TP	SP-5660TP	SP-5600TP	SP-5500TP	SP-5600WA	SP-5500WA	SP-5400WA
Model: PFXSP5700TPD	Model: PFXSP5660TPD	Model: PFXSP5600TPD	Model: PFXSP5500TPD	Model: PFXSP5600WAD	Model: PFXSP5500WAD	Model: PFXSP5400WAD

SP5000 Series is a combined unit of Display Module and Box Module.
The power consumption or weight for the combined unit equals each sum of power consumption or weight of the two modules.

■Model Number Configuration

Display Module

PFXSP5 * * * * * D
(1) (2) (3)(4)(5)

(1) Size		(2) Wireless LAN		(3) Resolution		(4) Touch Panel		(5) Power Supply	
7	15″	60	Yes	T	TFT	P	Premium (Multi)	D	DC
6	12″	00	-	W	Wide TFT	A	Advanced		
5	10″								
4	7″								

・Coated and/or color selectable display modules are also available. In addition to Silver, there are three optional colors, Black Beige Off-wihte

×

Box Module

PFXSP5 B * *
(6) (7)

(6) Type		(7) Class	
B	Box	40	Open
		10	Power

・Coated models are also available.

■Display Specifications

	Premium Display				Advanced Display		
	SP-5700TP	SP-5660TP	SP-5600TP	SP-5500TP	SP-5600WA	SP-5500WA	SP-5400WA
Display Type	TFT color LCD						
Display Size	15″	12″		10″	12″ wide	10″ wide	7″ wide
Resolution	1,024 x 768 pixels (XGA)			800 x 600 pixels (SVGA)	1,280 x 800 pixels (WXGA)		800 x 480 pixels (WVGA)
Auto Scaling	Yes				-		
Effective Display Area	W304.1 x H228.1mm (W11.97 x H8.98 in.)	W245.8 x H184.3mm (W9.68 x H7.26 in.)		W211.2 x H158.4mm (W8.31 x H6.24 in.)	W261.1 x H163.2mm (W10.28 x H6.43 in.)	W217.0 x H135.6mm (W8.54 x H5.34 in.)	W154.1 x H95.9mm (W6.06 x H3.78 in.)
Display Colors	16million colors				262,144 colors		
Backlight	White LED (Not user replaceable. When replacement is required, contact your local Pro-face distributor.)						
Backlight Service Life	50,000 hours or more (continuous operation at 25 ° C [77 ° F] before backlight brightness decreases to 50%)						
Brightness Control	0...100 (Adjusted with touch panel or software)						
Brightness Sensor	Yes				-		
Front USB Interface	Yes				-		
Touch Panel Type	Resistive Film (analog, multi-touch)				Resistive Film (analog)		
Touch Panel Resolution	1,024 x 1,024						
Touch Panel Service Life	1 million times or more						

■Electrical Specifications

		Premium Display				Advanced Display		
		SP-5700TP	SP-5660TP	SP-5600TP	SP-5500TP	SP-5600WA	SP-5500WA	SP-5400WA
Rated Input Voltage		12...24 Vdc						
Input Voltage Limits		10.8...28.8 Vdc						
Voltage Drop		12Vdc: 1.25ms or less 24Vdc: 5ms or less						
*1 Power Consumption	Max	22W	23W	21W	15W	11.5W	8.5W	6.5W
	When power is not supplied to devices via front USB	19W or less	20W or less	18W or less	12W or less	-		
	When screen turns off the backlight (Standby Mode)	6W or less	8W or less	6W or less	6W or less	2.5W or less		2W or less
	When screen backlight 20%	11W or less	13W or less	11W or less	8W or less	6W or less	5W or less	4W or less
In-Rush Current		30A or less						
Voltage Endurance		1,000 Vac, 20 mA for 1 minute (between charging and FG terminals)						
Insulation Resistance		500 Vdc, 10 MΩ or more (between charging and FG terminals)						

*1 Power Consumption for Display Module only 。

Display Module

SP5000SERIES

■Environmental Specification

	Premium Display				Advanced Display		
	SP-5700TP	SP-5660TP	SP-5600TP	SP-5500TP	SP-5600WA	SP-5500WA	SP-5400WA
Surrounding Air Temperature	0...60 ° C (32...140 ° F)						
Storage Temperature	-20...60 ° C (-4...140 ° F)						
Surrounding Air and Storage Humidity	10%...90% RH (Non condensing, wet bulb temperature 39 ° C [102.2 ° F] or less)						
Dust	0.1 mg/m3 (10-7 oz/ft3) or less (non-conductive levels)						
Pollution Degree	For use in Pollution Degree 2 environment						
Corrosive Gases	Free of corrosive gases						
Atmospheric Pressure (Operating Altitude)	800...1,114 hPa (2,000 m [6,561 ft] or lower)						
Vibration Resistance	IEC/EN 61131-2 compliant 5...9 Hz Single amplitude 3.5 mm (0.14 in.) 9...150 Hz Fixed acceleration: 9.8 m/s2 X, Y, Z directions for 10 cycles (approx. 100 min.)						
Shock Resistance	IEC/EN 61131-2 compliant 147 m/s2, X, Y, Z directions for 3 times						
Noise Immunity	Noise Voltage: 1,000 Vp-p Pulse Duration: 1 μs Rise Time: 1 ns(via noise simulator)						
Electrostatic Discharge Immunity	Contact Discharge Method: 6 kV (IEC/EN 61000-4-2 Level 3)						

■Interface Specification

	Premium Display				Advanced Display		
	SP-5700TP	SP-5660TP	SP-5600TP	SP-5500TP	SP-5600WA	SP-5500WA	SP-5400WA
Wireless LAN	-	Yes	-	-	-		
USB (Type A) *2	Connector: USB 2.0 (Type A) x 1, Power Supply Voltage: 5Vdc ±5%, Maximum Current Supplied: 500mA, Maximum Transmission Distance: 5m (16.4 ft)				-		
USB (mini B)	Connector: USB 2.0 (mini B) x 1, Maximum Transmission Distance: 5m (16.4 ft)				-		

*2 When using the Display Module with the Power Box, you can connect only one of each type of USB device, such as one USB flash drive, one transfer cable, or one bar code reader. If you connect multiple devices that are the same type, only the first device will work.

■Wireless LAN (Only for SP-5660TP) *3 *4

Standards	IEEE802.11b/IEEE802.11g/IEEE802.11n
Frequency bandwidth	2.4 GHz
Channel bandwidth	20 MHz
Channel	Access Point mode*5: 1...11 ch Client mode*6: North America US: 1...11 ch Japan JP: 1...13 ch Europe EU: 1...13 ch Korea KR: 1...13 ch China CN: 1...13 ch Taiwan TW: 1...11 ch
Transmission speed	IEEE802.11b: max 11 Mbps IEEE802.11g: max 54 Mbps IEEE802.11n: max 72.2 Mbps
Action mode	Client mode/Access Point mode
Communication mode	Infrastructure
Network authentication	Open, WPA-Personal, WPA2-Personal
Data encryption	WEP (128 bit) (Open)*7 AUTO/TKIP (WPA-Personal) AES (WPA2-Personal)
Maximum client connections	10
Connection angle and distance	Only the display side is connectable. The enabled connectivity angle and distance depend on your operating environment, applications to be used, and a communication target device. Be sure to conduct operation check including directionality in your operating environment before use.

*3 For the Wireless LAN, please use in a combination with the Open Box module.
*4 Do not use wireless communication to control machinery. Wireless communication system design must take into account the possibility of communication interference.
*5 In Access Point mode, IEEE802.11d is not supported.
*6 If the surrounding access points do not support IEEE802.11d, channels are limited from 1 to 11ch.
*7 In Access Point mode, WEP is not supported.

■Structural Specification

	Premium Display				Advanced Display		
	SP-5700TP	SP-5660TP	SP-5600TP	SP-5500TP	SP-5600WA	SP-5500WA	SP-5400WA
Grounding	Functional grounding: Grounding resistance of 100 Ω, 2 mm2 (AWG 14) or thicker wire, or your country's applicable standard (same for FG and SG terminals).						
Cooling Method	Natural air circulation						
Structure *8	When using a factory-installed front USB cover: IP65F, IP67F. When using a front USB cover option (PFXZCDCVUS1): IP66F, IP67F, Type 4X (Indoor Use Only)/13 * The front face of this product when properly installed in an enclosure and not using the front panel USB port.				IP66F, IP67F, TYPE 4X (Indoor Use Only)/13 * on the front panel when properly installed in an enclosure.		
External Dimensions	W397 x H296 x D67 mm (W15.6 x H11.7 x D2.64 in.)	W315 x H241 x D67 mm (W12.4 x H9.49 x D2.64 in.)		W272.5 x H214.5 x D67 mm(W10.73 x H8.44 x D2.64 in.)	W308.5 x H230.5 x D67 mm (W12.15 x H9.07 x D2.64 in.)	W268.5 x H198.5 x D67 mm (W10.57 x H7.81 x D2.64 in.)	W203.6 x H148.6 x D36 mm (W8.02 x H5.85 x D1.42 in.)*9
Panel Cut Dimensions *10	W383.5 x H282.5mm	W301.5 x H227.5mm		W259 x H201mm	W295 x H217mm	W255 x H185mm	W190 x H135mm
Weight *11	4.5kg以下	3.2kg以下		2.7kg以下	3kg以下	2.5kg以下	1.2kg以下

*8 The front face of this product, installed in a solid panel, has been tested using conditions equivalent to the standards shown in the specification.
*9 When combined with Box Module, the depth is 67mm (2.64 in.).
*10 For dimensional tolerance, everything +1/-0 mm (+0.04/-0 in.) and R in angle are below R3 (R0.12 in.)
*11 Weight for Display Module only

20140328-07

■External Dimensions/Parts Identification/Panel Cut Dimensions

SP-5700TP

mm [in.]

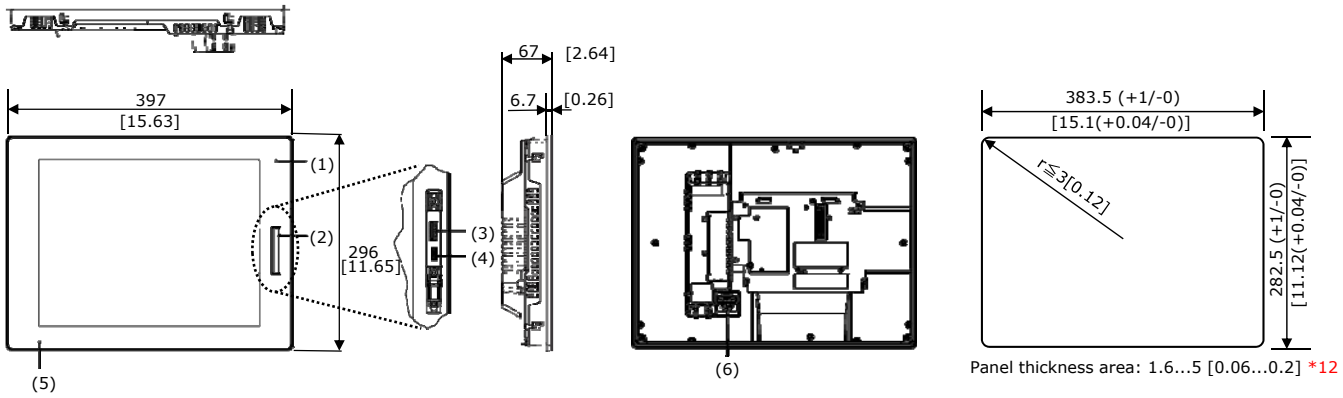

(1) Brightness Sensor (2) Front USB Cover (3) USB (Type A) Interface (4) USB (mini-B) Interface (5) Status LED (6) Power Supply Connector

SP-5660TP / SP-5600TP

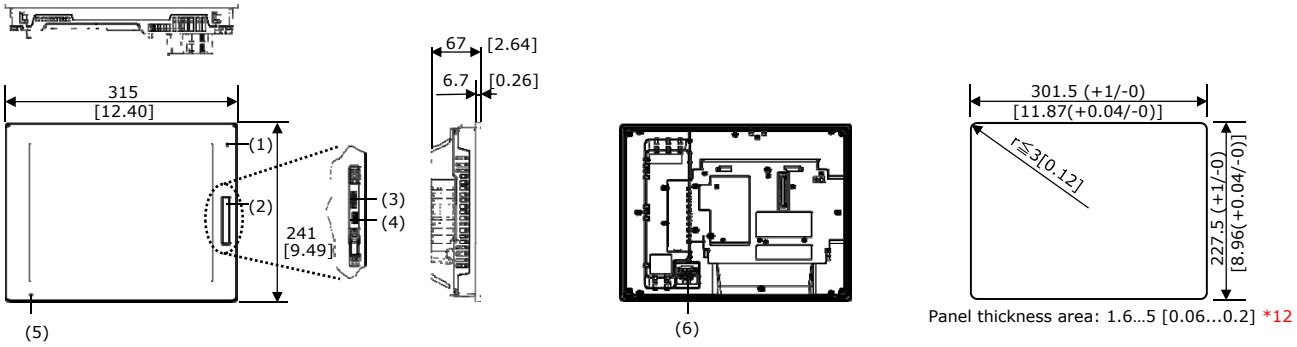

(1) Brightness Sensor (2) Front USB Cover (3) USB (Type A) Interface (4) USB (mini-B) Interface (5) Status LED (6) Power Supply Connector

SP-5500TP

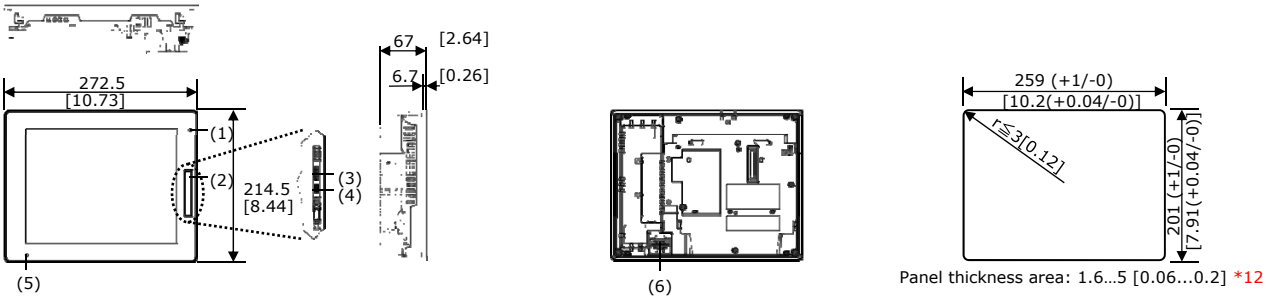

(1) Brightness Sensor (2) Front USB Cover (3) USB (Type A) Interface (4) USB (mini-B) Interface (5) Status LED (6) Power Supply Connector

*12 Even if the installation wall thickness is within the recommended range for the "Panel Cut Dimensions", depending on wall's material, size, and installation location of this product and other devices, the installation wall could warp. To prevent warping, the installation surface may need to be strengthened.

■External Dimensions/Parts Identification/Panel Cut Dimensions

SP-5600WA

mm [in.]

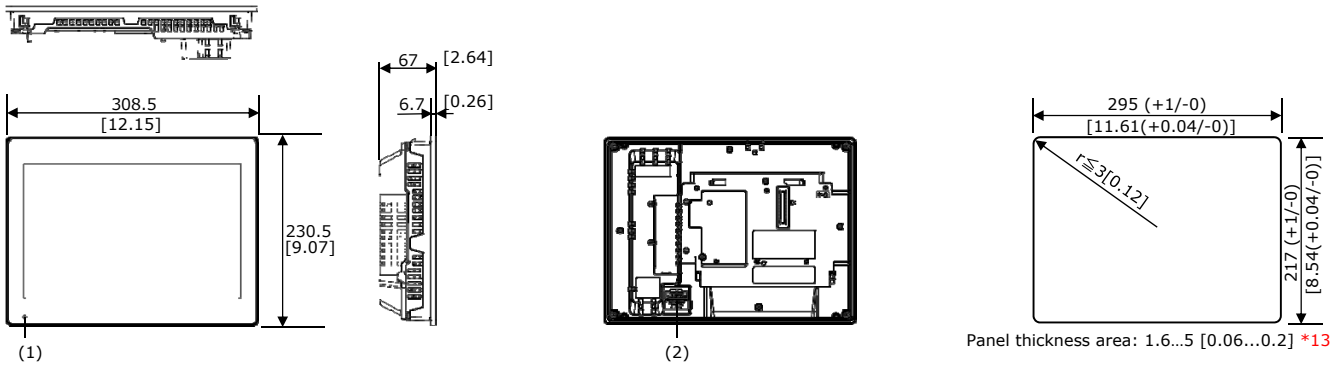

Panel thickness area: 1.6...5 [0.06...0.2] *13

(1) Status LED (2) Power Supply Connector

SP-5500WA

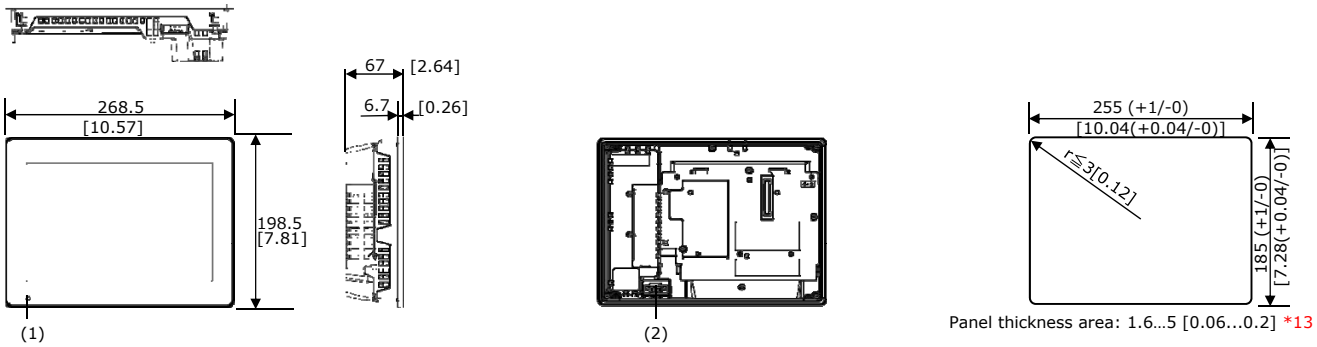

Panel thickness area: 1.6...5 [0.06...0.2] *13

(1) Status LED (2) Power Supply Connector

SP-5400WA

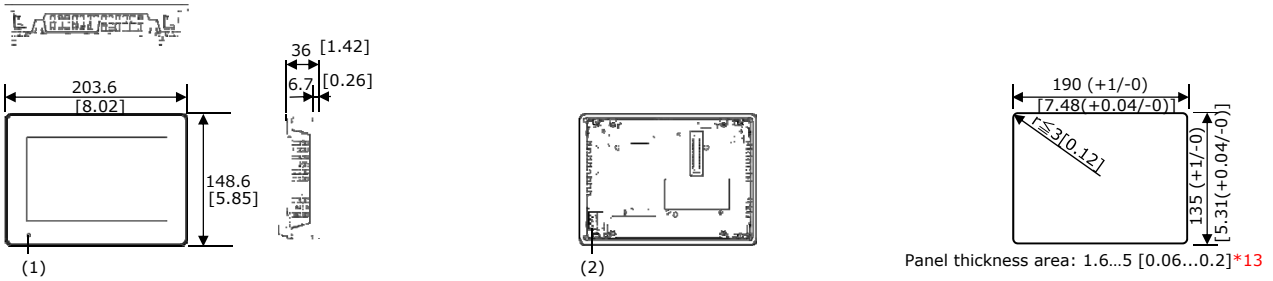

Panel thickness area: 1.6...5 [0.06...0.2]*13

(1) Status LED (2) Power Supply Connector

*13 Even if the installation wall thickness is within the recommended range for the "Panel Cut Dimensions", depending on wall's material, size, and installation location of this product and other devices, the installation wall could warp. To prevent warping, the installation surface may need to be strengthened.

Box Module

SP5000SERIES

SP-5B40

Model: PFXSP5B40

SP-5B10

Model: PFXSP5B10

SP5000 Series is a combined unit of Display Module and Box Module.
The power consumption or weight for the combined unit equals each sum of power consumption or weight of the two modules.

■ Model Number Configuration

Box Module

PFXSP5 B **
(1) (2)

(1) Type		(2) Class	
B	BOX	40	Open
		10	Power

▪ Coated models are also available.

×

Display Module

PFXSP5 * * * * * D
(3) (4) (5)(6)(7)

(3) Size		(4) Wireless LAN		(5) Resolution		(6) Touch Panel		(7) Power Supply	
7	15″	60	Yes	T	TFT	P	Premium (Multi)	D	DC
6	12″	00	-	W	Wide TFT	A	Advanced		
5	10″								
4	7″								

▪ Coated and/or color selectable display modules are also available. In addition to Silver, there are three optional colors, Black Beige Off-white

■ Electrical Specifications

		Open Box	Power Box
		SP-5B40	SP-5B10
Rated Input Voltage		12Vdc (Supply from Display Module)	
Power Consumption*1	Max	35W	25W
	When power is not supplied to external devices	22.5W or less	12.5W or less

*1 Power consumption for Box Module only

■ Environmental Specifications

	Open Box	Power Box
	SP-5B40	SP-5B10
Surrounding Air Temperature	0...60 ° C (32...140 ° F)	
Storage Temperature	-20...60 ° C (-4...140 ° F)	
Surrounding Air and Storage Humidity	10%...90% RH (Non condensing, wet bulb temperature 39 ° C [102.2 ° F] or less)	
Dust	0.1 mg/m3 (10-7 oz/ft3) or less (non-conductive levels)	
Pollution Degree	For use in Pollution Degree 2 environment	
Corrosive Gases	Free of corrosive gases	
Atmospheric Pressure (Operating Altitude)	800...1,114 hPa (2,000 m [6,561 ft] or lower)	
Vibration Resistance	IEC/EN 61131-2 compliant 5...9 Hz Single amplitude 3.5 mm (0.14 in.) 9...150 Hz Fixed acceleration: 9.8 m/s2 X, Y, Z directions for 10 cycles (approx. 100 min.)	
Shock Resistance	IEC/EN 61131-2 compliant 147 m/s2, X, Y, Z directions for 3 times	
Noise Immunity	Noise Voltage: 1,000 Vp-p Pulse Duration: 1 μs Rise Time: 1 ns (via noise simulator)	
Electrostatic Discharge Immunity	Contact Discharge Method : 6kV (IEC/EN 61000-4-2 Level 3)	

Box Module Specifications

S P 5 0 0 0 S E R I E S

■ Memory

	Open Box	Power Box
	SP-5B40	SP-5B10
Application Memory	Screen Size: 64MB *CFast card	Screen Size: 64MB *SD card
	Free Space: About 5GB *2	Free Space: None
Backup Memory	NVRAM 320KB	
Control Memory	-	64KB

*2 You can install the applications you have used. As for hardware specifications, the CPU is Intel® Atom™ E6x0 1.3GHz (Single core/Dual thread)' and the main memory is 'DDR2 SDRAM 2GB'. For the other hardware specifications, refer to "SP5000 Series Open Box Reference Manual".

■ Interface Specifications

	Open Box	Power Box
	SP-5B40	SP-5B10
Serial Interface COM1	RS-232C/422/485, Data Length: 7 or 8 bits, Stop Bit: 1 or 2 bits Parity: None, odd, or even, Data Transmission Speed: 2,400（1,200）～ 115,200bps Connector: D-Sub 9 pin (plug)	
Serial Interface COM2	RS-232C/422/485, Data Length: 7 or 8 bits Stop Bit: 1 or 2 bits Parity: None, odd, or even Data Transmission Speed: 2,400(1,200)...115,200 bps Connector: D-Sub 9 pin (plug)	RS-232C/422/485, Data Length: 7 or 8 bits Stop Bit: 1 or 2 bits Parity: None, odd, or even Data Transmission Speed: 2,400(1,200)...115,200 bps, 187,500bps (MPI) Connector: D-Sub 9 pin (plug)
USB (Type A) Interface *3	Connector: USB2.0 (Type A) x 3 Power Supply Voltage: 5Vdc ±5% Maximum Current Supplied: 500mA /port, 1A total for 3 ports Maximum Transmission Distance: 5m	Connector: USB2.0 (Type A) x 2 Power Supply Voltage: 5Vdc ±5% Maximum Current Supplied: 500mA / port Maximum Transmission Distance: 5m
USB (mini-B) Interface	Connector: USB 2.0 (mini-B) x 1, Maximum Transmission Distance: 5m (16.4 ft)	
Ethernet Interface	Standard: IEEE802.3i/IEEE802.3u/IEEE802.3ab, 10BASE-T/100BASE-TX/1000BASE-T Connector: Modular jack (RJ-45) x 2	
SD Card Interface	SD Card Slot (Storage) x 1	SD Card Slot (System) x 1 SD Card Slot (Storage) x 1
CFast Card Interface	CFast Card Slot (System) x 1 CFast Card Slot (Storage) x 1	-
Video Interface	DVI-D OUT Connector: DVI-D 24 pin (socket) x 1	-
Sound Input Interface	Sound Input: MIC or LINE input (software switch) Connector: MINI-JACK ø3.5 x 1	-
Sound Output Interface	Speaker Output: 300mW (Rated Load: 8Ω, Frequency : 1kHz) LINE Output: Rated load: 10kΩ or more Connector: 2-piece terminal block (AUX) x 1	
AUX Input /Output Interface	Alarm Output / Buzzer Output Rated Voltage: 24Vdc, Rated Current: 50mA or less Connector: 2-piece terminal block x 1	

*3 When using the Display Module with the Power Box, you can connect only one of each type of USB device, such as one USB flash drive, one transfer cable, or one bar code reader. If you connect multiple devices that are the same type, only the first device will work.

■Structural Specifications

	Open Box	Power Box
	SP-5B40	SP-5B10
Cooling Method	Natural air circulation	
External Dimensions *4	W188 x H131 x D45 mm (W7.4 x H5.16 x D1.77 in.)	
Weight *4	0.9kg (1.98 lb) or less	

*4 External Dimensions and Weight for Box Module only

■External dimensions/Parts Identifications

SP-5B40

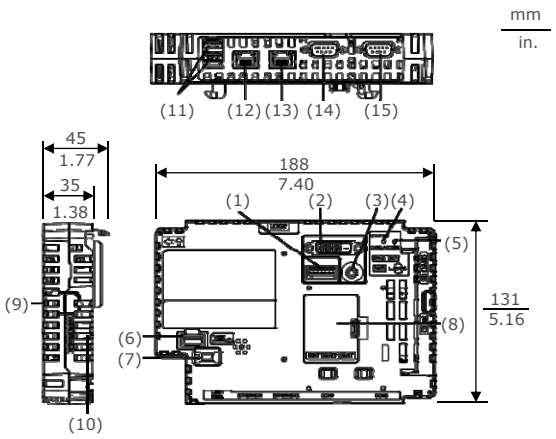

(1)Auxiliary Output/Speaker Output Interface (AUX) (2)DVI-D Output Interface (3)AUDIO Input Interface (LIN/MIC) (4)Status LED (5)Card Access LED (6)USB (Type A) Interface (7)USB (mini-B) Interface (8)Expansion Unit Interface Cover (EXT) (9)Storage Card Cover (10)System Card Cover (11)USB (Type A) Interface (12)Ethernet Interface (ETH1) (13)Ethernet Interface (ETH2) (14)Serial Interface (COM1) (15)Serial Interface (COM2)

SP-5B10

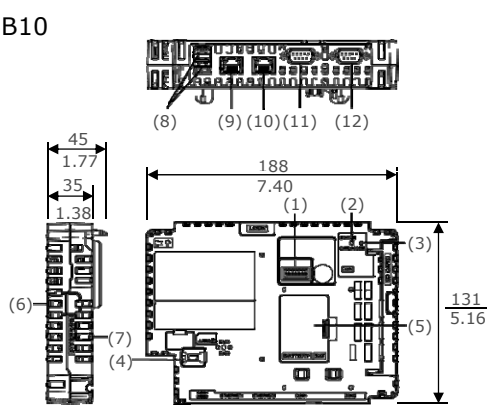

(1)Auxiliary Output/Speaker Output Interface (AUX) (2)Status LED (3)Card Access LED (4)USB (mini-B) Interface (5)Expansion Unit Interface Cover (EXT) (6)Storage Card Cover (7)System Card Cover (8)USB (Type A) Interface (9)Ethernet Interface (ETH1) (10)Ethernet Interface (ETH2) (11)Serial Interface (COM1) (12)Serial Interface (COM2)

Pro-face

by Schneider Electric

All eyes on the customer make us "the best interface"

intimacy
Connect intimately with our customers and stakeholders

innovation
Provide benefits to our customers through innovation

interaction
Enhance customer experience through positive interaction

⚠ WARNING

HAZARD OF OPERATOR INJURY, OR UNINTENDED EQUIPMENT DAMAGE

Before operating any of these products, be sure to read all related manuals thoroughly.

Failure to follow these instructions can result in death, serious injury or unintended equipment damage.

- For printing purposes, the colors in this catalog may differ from those of the actual unit.
- Actual user screens may differ from the screens shown here.
- Electric equipment should be installed, operated, serviced, and maintained only by qualified personnel. No responsibility is assumed by Digital for any consequences arising out of the use of this material.
- All product names used in this catalog are the registered trademarks or trademarks of their respective companies.
- All information contained in this catalog is subject to change without notice.

Global Headquarters
Digital Electronics Corporation
Osaka, JAPAN
Tel: +81 (0)6 6208-3133
Fax: +81 (0)6 6208-3136
www.pro-face.com
info@pro-face.com

Indonesia
Pro-face Indonesia
Ventura Building - 7th Floor, Jl. RA Kartini Kav.26,
Cilandak, Jakarta Selatan 12430 Indonesia
Tel / Fax: +62 21 750 4496
www.proface.co.id
info@proface.co.id

South Korea
Pro-face Korea Co., Ltd.
Seoul, SOUTH KOREA
Tel: +82 (0)2 2630 9850
Fax: +82 (0)2 2630 9860
www.proface.co.kr
proface@proface.co.kr

European Headquarters
Pro-face Europe B.V.
Hoofddorp, THE NETHERLANDS
Tel: +31 (0)23 55 44 099
Fax: +31 (0)23 55 44 090
www.proface.eu
info@proface.eu

Italy
Pro-face Italia S.p.a.
Bovisio Masciago (Milano), ITALY
Tel: +39 (0)362 59 96 1
Fax: +39 (0)362 59 96 69
www.proface.it
info@proface.it

Spain and Portugal
Pro-face España
Cardedeu (Barcelona), SPAIN
Tel: +34 (0)93 846 07 45
Fax: +34 (0)93 845 48 68
www.proface.es
info@proface.es

Australia and New Zealand
Pro-face Australia
Mt. Waverley, AUSTRALIA
Tel: +61 (0)3 9550 7396
Fax: +61 (0)3 9550 7390
www.pro-face.com.au www.pro-face.co.nz
pfau@pro-face.com

North America
Pro-face America, Inc.
Ann Arbor, MI U.S.A
Tel: +1 734 477 0600
Fax: +1 734 864 7347
www.profaceamerica.com
info@profaceamerica.com

Taiwan
Pro-face Taiwan
Taipei, TAIWAN
Tel: +886 (0)2 2657 1121
Fax: +886 (0)2 2657 1021
www.proface.com.tw
proface@proface.com.tw

China
Pro-face China International Trading Co., Ltd.
Shanghai, P. R. CHINA
Tel: +86 (0)21 6361 5175
Fax: +86 (0)21 6361 5176
www.proface.com.cn
proface@proface.com.cn

Singapore
Pro-face Singapore
TechPoint, Singapore
Tel: +65-6832-5533
Fax: +65-6415-1605
www.proface.sg
info@proface.sg

India
Pro-face India
Bangalore, INDIA
Tel: +91 80 4333 3540/3541
Fax: +91 80 4333 3222
www.proface.co.in
sales.proface@proface.co.in

South-East Asia Pacific
Pro-face South-East Asia Pacific Co.,Ltd.
Bangkok, THAILAND
Tel: +66 (0)2 617 5678
Fax: +66 (0)2 617 5688
www.proface.co.th
pfsales@proface.co.th

Austria
Pro-face Europe B.V.(Austria Office)
Hagenberg, AUSTRIA
Tel: +43 7236 3343 620
FAX: +43 7236 3343 629
www.proface.at
info@proface.at

Denmark
Pro-face Northern Europe ApS
Roskilde, DENMARK
Tel: +45 70 22 01 22
Fax: +45 70 22 01 33
www.proface.dk
info@proface.dk

Sweden
Pro-face Sweden AB
Löddeköpinge (Malmö), SWEDEN
Tel: +46 46 540 90 70
Fax: +46 46 71 27 90
www.proface.se
info@proface.se

France
Pro-face France S.A.S.
Mitry-Mory, FRANCE
Tel: +33 (0)1 60 21 22 91
Fax: +33 (0)1 60 21 22 92
www.proface.fr
info@proface.fr

Poland
Pro-face Europe B.V.(Warsaw Office)
Warszawa, POLAND
Tel: +48 (22) 465 66 62
Fax: +48 (22) 465 66 67
www.proface.pl
info@proface.pl

Switzerland
Pro-face Schweiz GmbH
Regensdorf, SWITZERLAND
Tel: +41 (0)43 343 7272
Fax: +41 (0)43 343 7279
www.proface.ch
info@proface.ch

Germany
Pro-face Deutschland GmbH
Solingen, GERMANY
Tel: +49 (0)212 258 260
Fax: +49 (0)212 258 2640
www.proface.de
info@pro-face.de

Russia
Pro-face Europe B.V. (Russia Office)
Saint-Petersburg, RUSSIA
Tel: +7 (812) 336 47 06
Fax: +7 (812) 336 47 18
www.pro-face.ru
info@pro-face.ru

United Kingdom
Pro-face UK Ltd
Coventry, ENGLAND
Tel: +44 (0)2476 511288
Fax: +44 (0)2476 511499
www.proface.co.uk
info@proface.co.uk

Copyright © 2015.5 Digital Electronics Corporation. All Rights Reserved.

WC/xx1404-SP5000ALL-02b00